

X-series Controller



X4e Controller

X4e controller is a professional contr skype
equipment specially designed for LED engineering applications.
various video signal interfaces, supports high-definition digital po
HDMI, DVI, DP), and seamless switching between signals can be
supports broadcast quality scaling and multi-pictures display.





Overview | Product specifications | Download

Interfaces

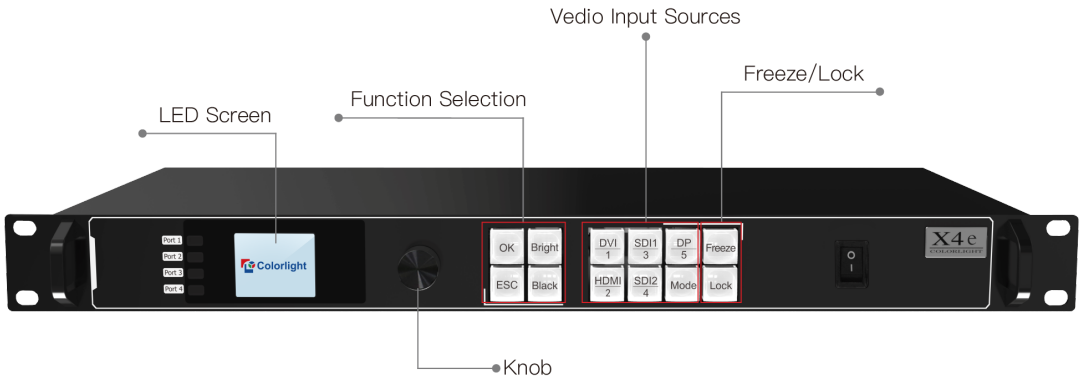

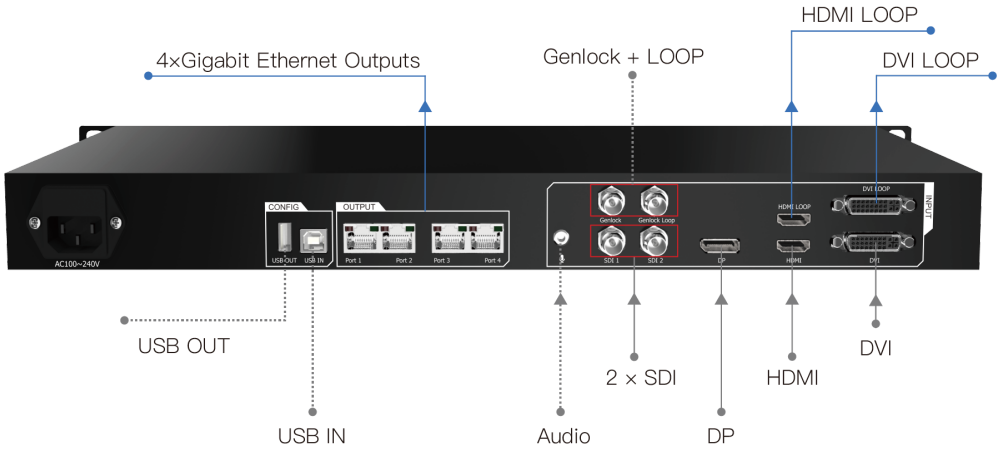

skype

Features

- Support various digital signal ports, including 2×SDI, 1×DP, 1×HDMI (with loop), 1×DVI (with loop)
- Support input resolution up to 1920*1200@60Hz
- Loading capacity: 2.6 million pixels, Maximum Width: 4096 pixels, Maximum Height: 2560 pixels
- Support arbitrary switching and scaling of video source
- Support three-picture display, the location and size can be adjusted freely
- Support HDCP1.4
- Dual USB2.0 for high speed configuration and easy cascading among controllers
- Support brightness and chromaticity adjustment
- Support improved gray-scale at low brightness
- Compatible with all receiving cards, multifunction card, optical fiber transceivers of Colorlight

S-series Sender
i Receiving-series
C-series Player
Software
Accessories

Cloud Service Cluster Management Solution
3D Display Solution

Overseas Support
Partner

Contact
Partner

Tel: +86-755
Fax: +86-75
Email: color

2017© Copyright Colorlight (Shenzhen) Cloud Technology Co., Ltd design:Zijiren

skype